Electrolux PROFESSIONAL

Cooking Sandwich Press SpeeDelight with flexible top plate, smooth, removable teflon plate

ITEM #

MODEL #

NAME #

SIS #

AIA #



603941 (HSPP3RPFS) SpeeDelight with flexible top plate, removable smooth teflon plate - 208V - US

Short Form Specification

Item No.

Unit combines 3 cooking technologies: contact, infrared radiation and microwaves to provide perfectly cooked food, heated to the core. The Energy Saving Mode automatically switches to stand-by after an amount of time set by the operator (from 1 to 60 minutes). Delivered with USB port and wi-fi connection to optimize workflow allowing local and remote interaction (temperatures, countdowns, warnings). Lid, top plate, back cover and side panels constructed in 304 AISI stainless steel, bottom in AISI 430 stainless steel, external high-grade composite material paneling and handle. Self-adjusting upper plate adapting to food thickness or lockable in fixed position to avoid contact with food. Possibility to manually adjust the maximum movement of the upper plate. Smooth top contact plate 8 7/16" × 8 7/16" (215 x 215 mm) in aluminum with non-stick coating. Can accept snacks from 2/5" to 3" (10 to 75 mm) thick. Smooth 5/32" (4 mm) thick quartz glass bottom cooking surface 10" x 10" (250 x 250 mm). 2 probes independently control the temperature of the top and bottom plates from 212 to 536°F (100 to 250 °C). Automatic lid holding and lifting at the end of the cooking cycle via mechanical spring. Electronic control with digital 4.3" LED display, countdown display and buzzer at the end of the cycle. 800 W heating element on the top plate and 800 W electrical armored heating elements on the bottom plate. 2 x 1050 W magnetrons for microwaves. Front air inlet and back outlet for efficient cooling ventilation. Ergonomic handle in high-grade composite material for easy movement of the lid. Removable top front panel and removable top cooking plate for better cleanability. 8 preset programs (customizable in: microwave time; total time; temperature).

Main Features

- It combines 3 cooking technologies: contact, infrared radiation and microwaves to provide perfectly cooked food, heated to the core.
- Self adjusting upper plate to heat food adapting to its thickness.
- The Energy Saving Mode automatically switches to stand-by after an amount of time settled by the operator (from 1 to 60 minutes).
- Delivered with USB port and wi-fi connection to optimize workflows allowing local and remote inteaction (temperatures, countdowns, warnings).
- Electronic control with digital 4.3''LED display with adjustable brightness.
- 8 programs selectable on the display.
  The 8 programs can be adjusted by the user. The programmable parameters are:
  -top plate temperature
  -bottom plate temperature
  -total duration of each cycle
  -duration and distribution of microwaves within each cycle.
- Countdown display and buzzer with adjustable volume at the end of the cycle.
- Automatic mechanical lid holding and opening system controlled.
- Ergonomic handle for easy movement of the lid.
- Non-stick pressed tray to be used during all cooking cycles for maximum cleanability, meeting food contact requirements.
- ETL safety approved, complies with UL 923 and CAN/CSA 22.2 standards.
- ETL sanitation approved, complies with NSF/ANSI 4 standard.
- This product is in compliance with EPA202 requirements, Therefore according to UL710B Ed.2 Section 59 - Emission test" and therefore is not required to be under a hood.

APPROVAL:

Cooking Sandwich Press SpeeDelight with flexible top plate, smooth, removable teflon plate

Construction

- Aluminum ribbed smooth contact plate 8 7/16" × 8 7/16"(215 x215 mm) treated with a special non-stick coating.
- Smooth 5/32" (4 mm) thick quartz glass bottom cooking surface 9 13/16" x 9 13/16" (250 x 250 mm).
- Two (2) temperature probes for an independent control of the top and bottom plate temperature.
- Independent temperature setting of the top and bottom plates from 212 to 536°F (100 to 250 °C).
- Automatic lifting of the lid at the end of the cooking cycle via mechanical spring.
- Lid covers, handle and side panels in high-grade reinforced composite material.
- 800W heating element on the top plate.
- 800W electrical armored heating elements on the bottom plate.
- 2 x 1050W magnetrons for microwave.
- Front air inlet and back outlet for efficient cooling ventilation allows easy air filters removal and side by side installation.

User Interface & Data Management

- Connectivity ready for real time access to connected appliances from remote and data monitoring (requires optional accessory – contact the Company for more details).

Included Accessories

• 1 of Glass saver for SpeeDelight	PNC 653527
• 1 of Cleaning brush for SpeeDelight	PNC 653623
• 1 of Spatula for SpeeDelight	PNC 653625
• 1 of 4 stainless steel feet 3" (76 mm) height for SpeeDelight	PNC 653791
• 1 of SpeeDelight spacer stop kit for rear ventilation	PNC 653800
• 1 of Pressed non-stick tray	PNC 653802
• 1 of Brush with nylon bristles	PNC 653803
• 1 of Brush with brass bristles	PNC 653804

Optional Accessories

• Glass saver for SpeeDelight	PNC 653527	❑
• Cleaning brush for SpeeDelight	PNC 653623	❑
• Spatula for SpeeDelight	PNC 653625	❑
• Removable flat teflon upper plate for SpeeDelight	PNC 653790	❑
• Four (4) Rubber Feet 1 1/32" (26mm)	PNC 653792	❑
• Four (4) Rubber Feet 1 37/64" (40mm)	PNC 653793	❑
• SpeeDelight spacer stop kit for rear ventilation	PNC 653800	❑
• Pressed non-stick tray	PNC 653802	❑
• Brush with nylon bristles	PNC 653803	❑
• Brush with brass bristles	PNC 653804	❑

The company reserves the right to make modifications to the products without prior notice. All information correct at time of printing.

2026.11.19

Cooking Sandwich Press SpeeDelight with flexible top plate, smooth, removable teflon plate

Front

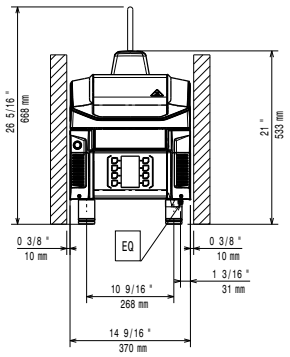

Side

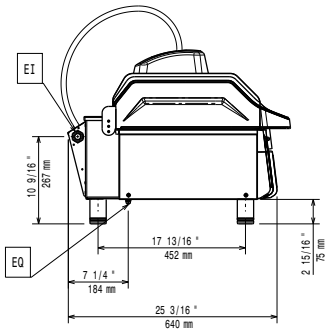

EI = Electrical connection
EO = Electrical Outlet

Top

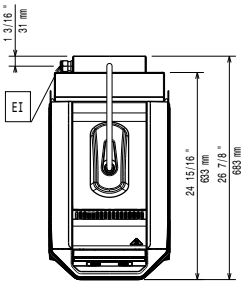

Distances

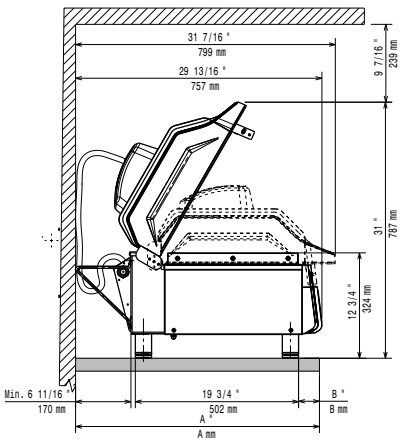

Electric

Supply voltage:	208 V/1 ph/60 Hz
Rated amps:	26 A
Electrical power, max:	5 kW
Total Watts:	5 kW
Plug type:	NEMA 6 -30
Minimum Circuit Ampacity (MCA):	30A

Installation:

Clearance: 7 ½" (190mm) from rear vertical panel

Key Information:

Cooking surface (WxD)	9 13/16" x 9 13/16"
External dimensions, Width:	14 9/16" (370 mm)
External dimensions, Depth:	26 7/8" (683 mm)
External dimensions, Height:	24 3/8" (619 mm)
Net weight:	104 lbs (47 kg)
Shipping width:	17 3/4" (450 mm)
Shipping depth:	29 15/16" (760 mm)
Shipping height:	27 15/16" (710 mm)
Shipping weight:	130 lbs (59 kg)
Shipping volume:	8.57 ft³ (0.24 m³)

The company reserves the right to make modifications to the products without prior notice. All information correct at time of printing.

2026.11.19